REV	ECN. NO.	APP	DATE
A	EDIÇÃO INICIAL		

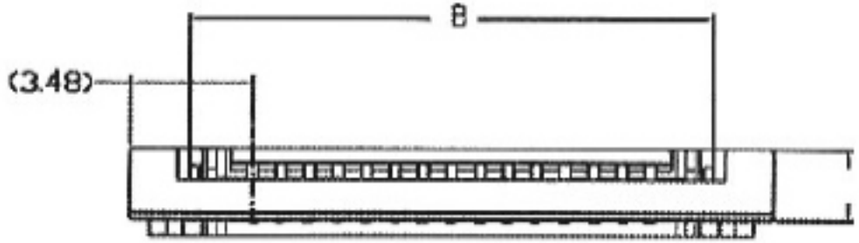

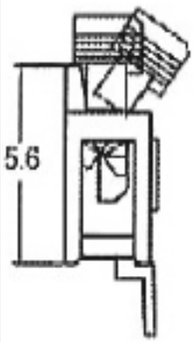

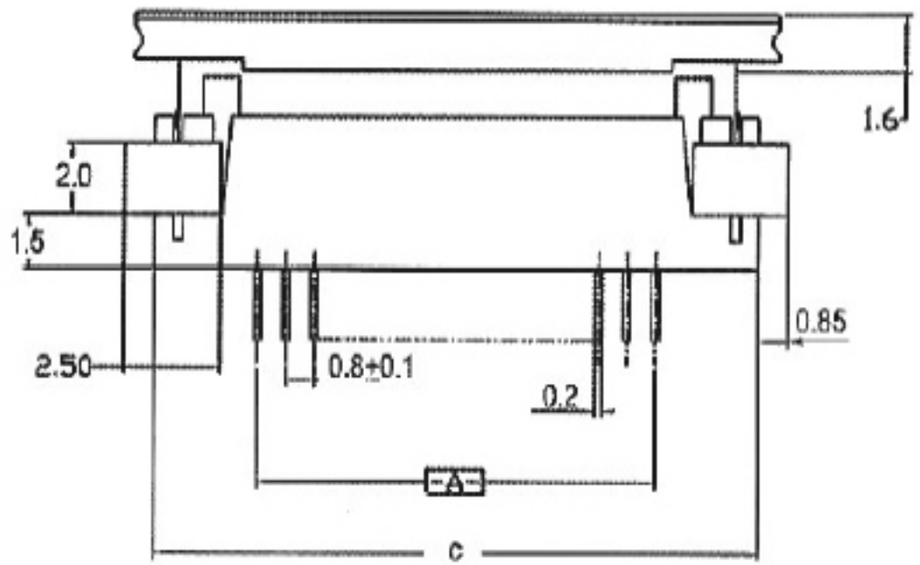

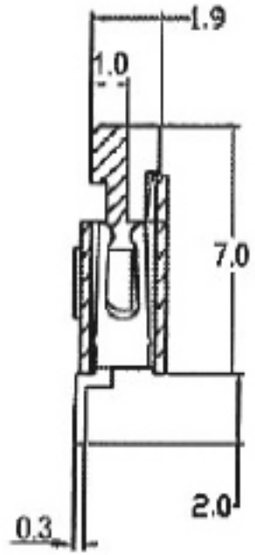

16	12.00	14.05	17.80
15	11.20	13.25	17.00
14	10.40	12.45	16.20
13	9.60	11.65	15.40
12	8.80	10.85	14.60
11	8.00	10.05	13.80
10	7.20	9.25	13.00
9	6.40	8.45	12.20
8	5.60	7.65	11.40
7	4.80	6.85	10.60
6	4.00	6.05	9.80
5	3.20	5.25	9.00
4	2.40	4.45	8.20
3	1.60	3.65	7.40
CKT	DIM. A	DIM. B	DIM. C

30	23.20	25.25	29.00
29	22.40	24.45	28.20
28	21.60	23.65	27.40
27	20.80	22.85	26.60
26	20.00	22.05	25.80
25	19.20	21.25	25.00
24	18.40	20.45	24.20
23	17.60	19.65	23.40
22	16.80	18.85	22.60
21	16.00	18.05	21.80
20	15.20	17.25	21.00
19	14.40	16.45	20.20
18	13.60	15.65	19.40
17	12.80	14.85	18.60
CKT	DIM. A	DIM. B	DIM. C

HOW TO ORDER:

MX-ZIF-[ ]-[ ]-0,8-SMD-[ ]

1 2 3

1-Mounting Type:
(UR)-Upper Contact
(BR)-Bottom Contact
2- N° of Ways:
See Table
3- (R) RoHS Compliant

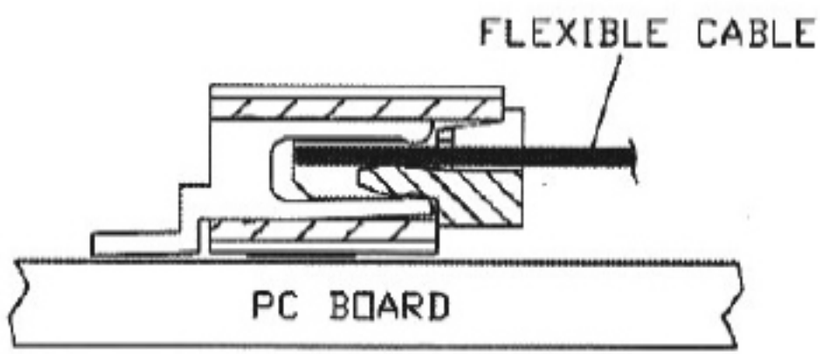

UPPER CONTACT

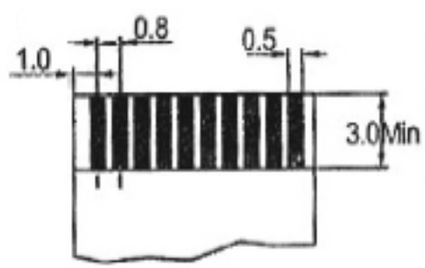

FFC/FPC DIMENSION
THICKNESS 0.3mm

MATRIX

MATRIX TECNOLOGIA IND. E COM. LTDA.

UNIT mm	SCALE	TITLE ZIF SMT FFC/FPC 0,8mm UPPER CONTACT	DATE SEPTEMBER 2007
TOLERANCE: ±0.25			APP. BY
		MATL	CHK. BY
		DWG. NO.	DR. BY DINO