REV	ECN. NO.	APP	DATE
A	EDIÇÃO INICIAL		
B	CÓDIGO ANTIGO "7753" FOI ALTERADO		

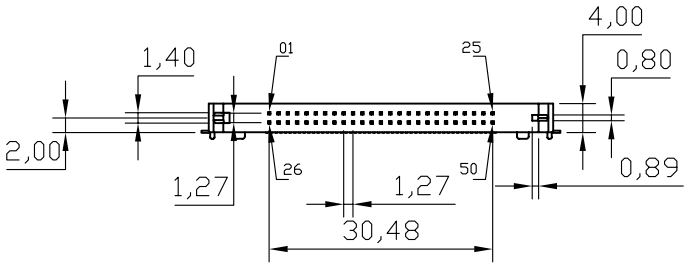

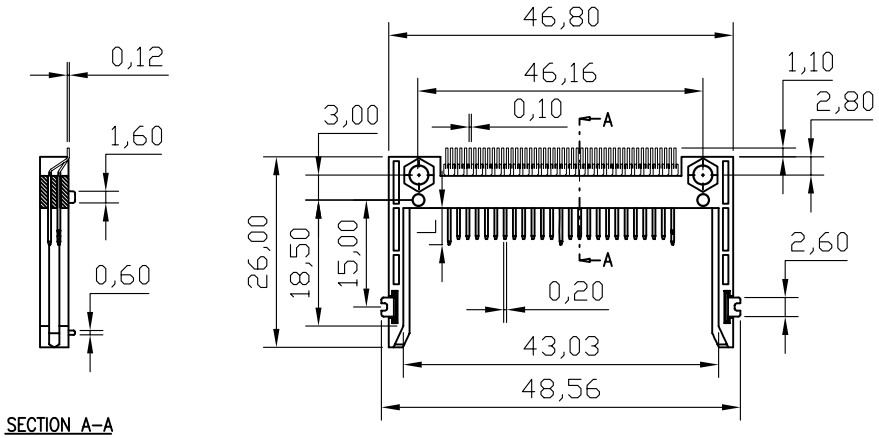

SECTION A–A

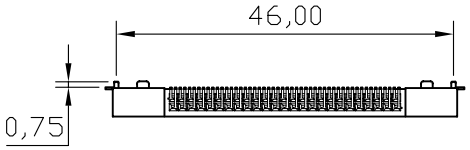

NOTES
MATERIAL
Insulator: Glass Reinforced LCP UL94V–0
Contacts: Brass
Mount ear: Brass;Tin/Lead plated overall
CONTACT PLATING
Contact area: Gold flash plating over 40u" Nickel
Solder tail area:100u" Tin/Lead plating over 40u" Nickel

TABLE		
Pin Type	Interface Dim.	Pin No.
Detect	3.5mm (0.138In.)	25,26
General	4.25mm (0.167In.)	The others
Power	5.0mm (0.197In.)	01,13,38,50

HOW TO ORDER:
CF7752W50[B]DR
1

1- Contact Type
(M)- Type 1
(A)- Type 2
(B)- Slim Type

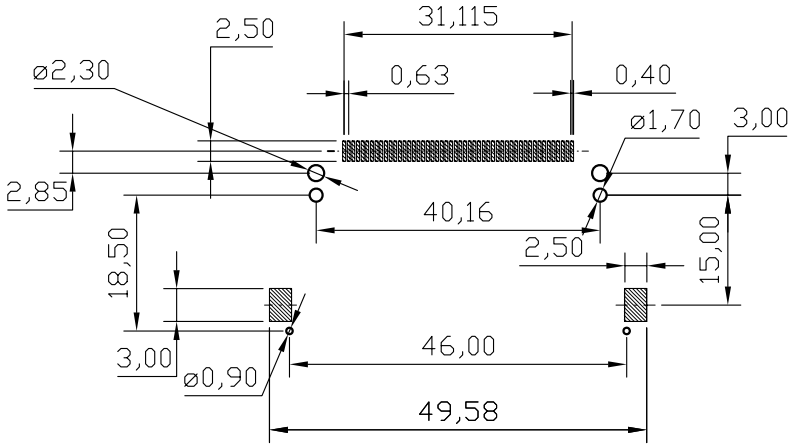

RECOMMENDED P.C.B. LAYOUT

MATRIX TECNOLOGIA IND. E COM. LTDA.

UNIT mm	SCALE	TITLE	DATE MARCH 2010
TOLERANCE: ±0.25		CFA Socket Slim 50 Ways	APP. BY
		MATL	CHK. BY
		DWG. NO.	DR. BY FELIPE