REV	ECN. NO.	APP	DATE
A	EDIÇÃO INICIAL		
B	NOVO CÓDIGO		

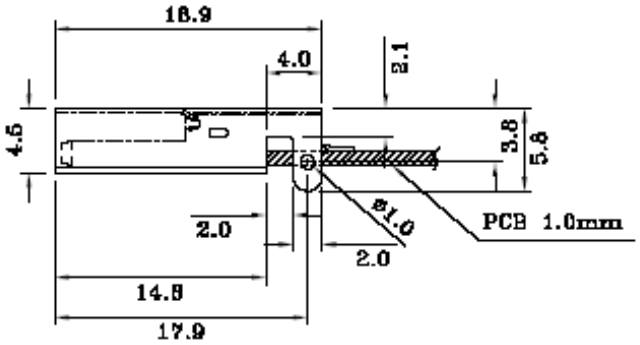

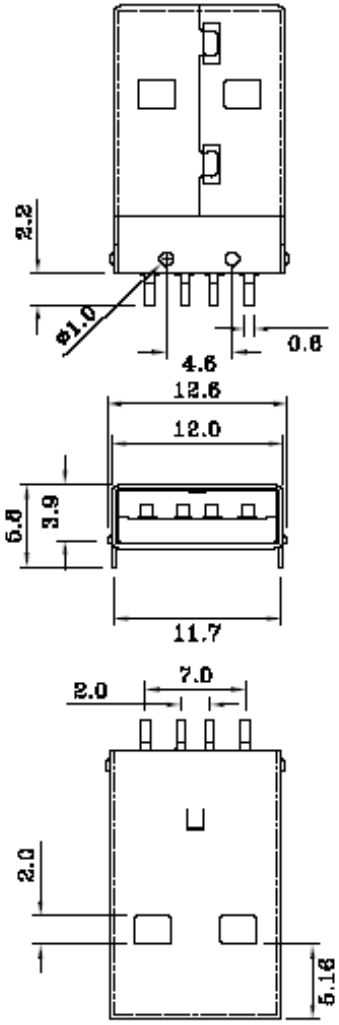

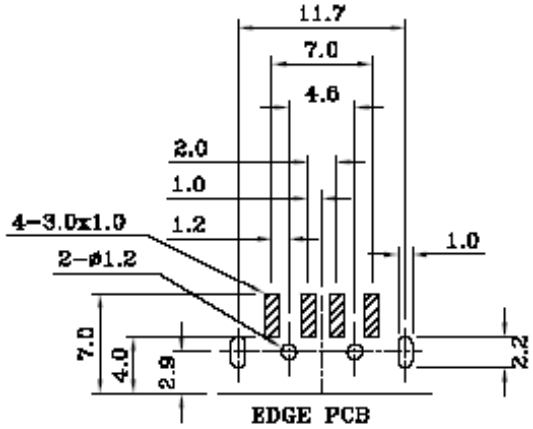

COMPONENT SIDE
(PCB LAYOUT)

HOW TO ORDER:
4404AMB4DR

NO.	NAME	MATERIAL	FINISH	REMARK	Q'TY
1	HOUSING	NYLON PA9T G.F.	BLACK		1
2	PIN TERM.	BRASS EH T:0.25 mm	GOLD/TIN PLATED	NI:1~1.5u;TIN:3u GOLD:1~3u"	4
3	SHELL	BRASS T:0.3 mm	NICKEL PLATED	NI:2~3u	1

MATRIX Tecnologia Ind. e Com. Ltda.

UNIT mm	SCALE	TITLE USB A Type Male 04 Contacts SMT	DATE JANUARY 2010
TOLERANCE: ±0.25			APP. BY
		MATL	CHK. BY
		DWG. NO.	DR. BY Felipe